10/100 BASE-T PULSE TRANSFORMERS

Features:

- **Compatible With Various 10/100TX Transciever Requiring 1:1 Transmit and 1:1 Receive Turn Ratio**
- **all IEEE 802.3 and ANSI X3.263 standard including 350 uH OCL with 8 mA bias**
- **Isolation Modules are Available for Most LAN IC Manufacturer's Products**
- **Operating temperature 0℃ to 70℃**
- **Minimum interwinding breakdown voltage of 1500Vrms**

Electrical Specifiations @ 25℃

Part Number	Insertion Loss (dB Max)	ReturnLoss (dB min)			CMRR (dB min)	Crosstalk (dB min)		
	0.1MHz to 100MHz	0.1MHz to 30MHz	50MHz	60MHz to 80MHz	0.1MHz to 100MHz	0.1MHz to 30MHz	60MHz	80MHz to 100MHz
YL18-2009S	-1.0	-22	-18	-12	-40	-50	-40	-40
YL18-2012S	-1.0	-22	-18	-12	-40	-50	-40	-40

Schematics

YL18-2009S

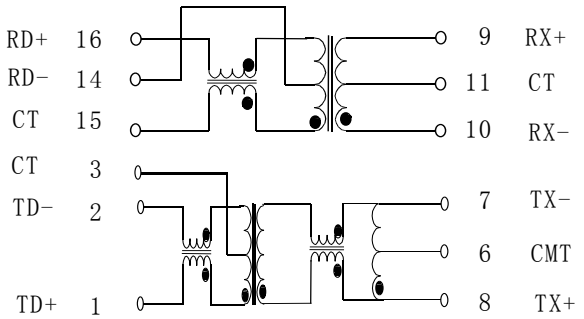

YL18-2012S

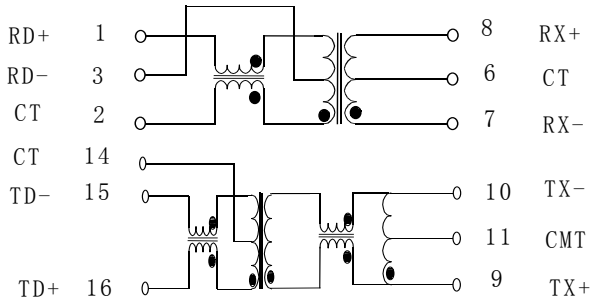

Mechanicals

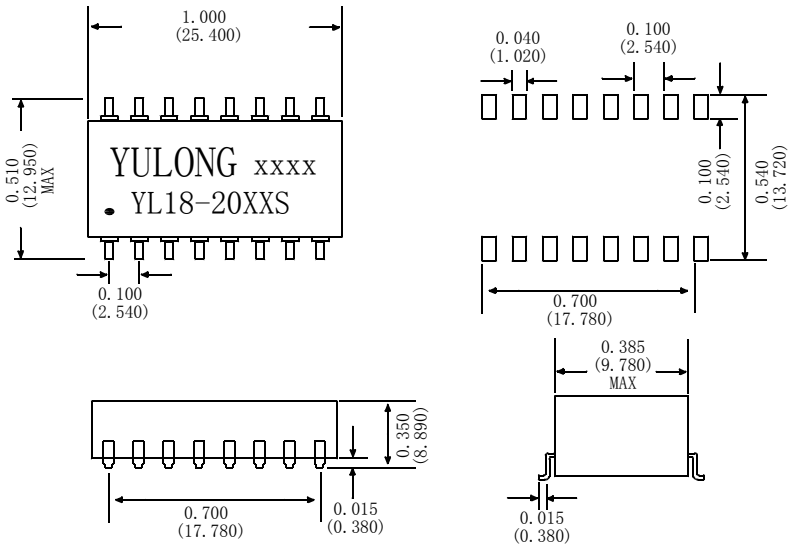

NOTE:Dimensions:inches/(mm) unless otherwise specified all tolerances are±0.010(0.25)